SEELEY INTERNATIONAL

INSTALLATION & OPERATION MANUAL
RPSI EVAPORATIVE COOLER

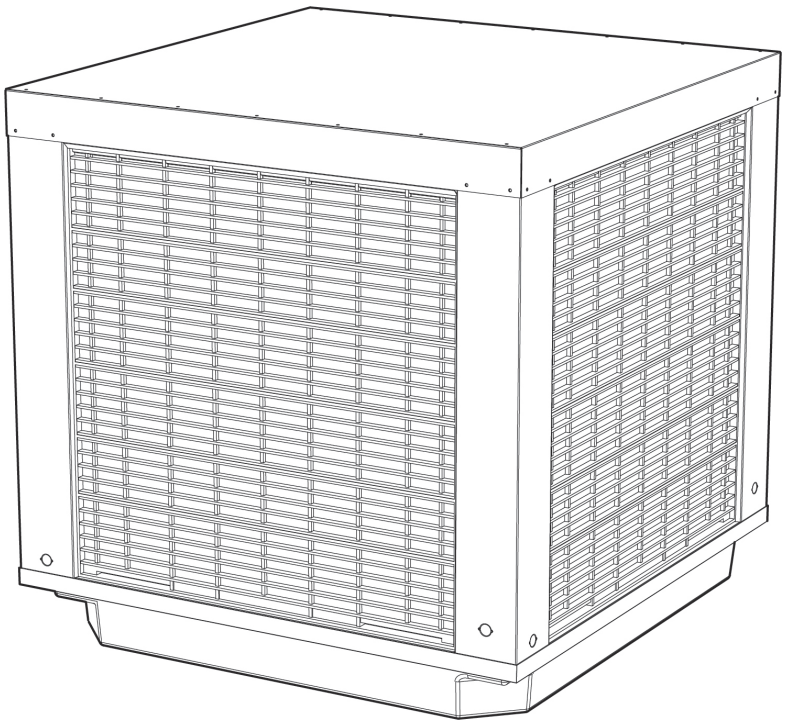

Braemar By SEELEY INTERNATIONAL™

ORIGINAL ENGLISH INSTRUCTIONS

TABLE OF CONTENTS

WARNING! FAILURE TO INSTALL AND COMMISSION THE PRODUCT IN COMPLIANCE WITH THESE INSTRUCTIONS, OR FAILURE TO DO THE JOB PROPERLY AND COMPETENTLY, MAY VOID THE CUSTOMER'S WARRANTY. FURTHER, IT COULD EXPOSE THE INSTALLER AND/OR THE RETAILER TO SERIOUS LIABILITY.

IMPORTANT SAFETY INSTRUCTIONS

READ AND SAVE THESE INSTRUCTIONS FOR FUTURE REFERENCE.

FOR EUROPE

This appliance can be used by children aged from 8 years and above and persons with reduced physical, sensory or mental capabilities or lack of experience and knowledge if they have been given supervision or instruction concerning use of the appliance in a safe way and understand the hazards involved. Children shall not play with the appliance. Cleaning and user maintenance shall not be made by children without supervision.

FOR AUSTRALIA, NEW ZEALAND & OTHER NON-EUROPEAN COUNTRIES

This appliance is not intended for use by persons (including children) with reduced physical, sensory or mental capabilities, or lack of experience and knowledge, unless they have been given supervision or instruction concerning use of the appliance by a person responsible for their safety. Children should be supervised to ensure that they do not play with the appliance.

Means for all pole disconnection must be incorporated in the fixed wiring in accordance with the wiring rules.

If the supply cord is damaged, it must be replaced by the manufacturer, its service agent or similarly qualified persons in order to avoid a hazard.

The following specifications for the cooler water supply are required:

Min Water Pressure: 100kPa (15psi)

Max Water Pressure: 800kPa (115psi)

New hose sets supplied with the appliance are to be used and old hose-sets should not be re-used.

WARNING - TO REDUCE THE RISK OF FIRE, ELECTRIC SHOCK, OR INJURY TO PERSONS, OBSERVE THE FOLLOWING:

a) Use this unit only in the manner intended by the manufacturer. If you have questions, contact the manufacturer.

b) Before servicing or cleaning unit, switch power off at service panel and lock the service disconnecting means to prevent power from being switched on accidentally. When the service disconnecting means cannot be locked, securely fasten a prominent warning device, such as a tag, to the service panel.

c) Installation work and electrical wiring must be done by qualified person(s) in accordance with all applicable codes and standards, including fire-rated construction.

d) When cutting or drilling into wall or ceiling, do not damage electrical wiring and other hidden utilities.

e) Ducted fans must always be vented to the outdoors.

f) Do not use this fan with any solid-state speed control device.

g) Do not use replacement parts that have not been recommended by the manufacturer (e.g. parts made at home using a 3D printer).

FOR AUSTRALIAN BUSHFIRE PRONE AREAS

WARNING If this evaporative cooler is installed in a BAL-12.5 to 29 area the evaporative cooler dropper duct and flashings shall be adequately sealed at the roof to prevent gaps greater than 3mm. The dropper duct and flashings shall be non-combustible.

WARNING: This cooler is NOT APPROVED for installation in any bushfire zoned area/property (BAL-12.5 to BAL-FZ).

IMPORTANT SAFETY INSTRUCTIONS

EMPLOYER AND EMPLOYEE RESPONSIBILITIES

The installation and maintenance of evaporative coolers at height has the potential to create Occupational Health and Safety issues for those involved. Installers are advised to ensure they are familiar with the relevant State and Federal legislation, such as Acts, Regulations, approved Codes of Practice and Australian Standards, which offer practical guidance on these health and safety issues. Compliance with these regulations will require appropriate work practices, equipment, training and qualifications of workers.

Seeley International provides the following information as a guide to contractors and employees to assist in minimising risk whilst working at height.

INSTALLER AND MAINTENANCE CONTRACTORS - RISK ASSESSMENT

A risk assessment of all hazardous tasks is required under legislation. A risk assessment is an essential element that should be conducted before the commencement of work, to identify and eliminate the risk of falls or to minimise these risks by implementing control measures. There is no need for this to be a complicated process, it just is a matter of looking at the job to be done and considering what action(s) are necessary so the person doing the job does not injure themselves.

This should be considered in terms of:

- What are the chances of an incident happening?
- What could the possible consequence be?
- What can you do to reduce, or better still, completely get rid of the risk?

SOME POINTS TO CONSIDER

- What is the best and safest access to the roof and working areas?
- If a worker is alone, who knows they are there and if they get into difficulty, how can they summon help? (Call someone on the ground? Mobile phone? etc.)
- What condition is the roof in? Should the trusses, underside or surface be checked?
- Does the worker have appropriate foot wear? (Flat sole jogger type is advisable.)
- Are all power cables / extension leads safe and appropriately rated?
- Are all ladders, tools and equipment suitable in good condition?
- Where ladders are to be used, is there a firm, stable base for them to stand on? Can they be tied or secured in some way at the top? Is the top of the ladder clear of electricity supply cables?
- Is there a roof anchor to attach a harness and lanyard to? If so, instruction should be issued for the use of an approved harness or only suitably trained people used.
- Are all tools and materials being used, prevented from slipping and falling onto a person at ground level? Is the area below the work area suitably protected to prevent persons walking in this area?
- Does the work schedule take into account weather conditions, allowing for work to be suspended in high winds, thunderstorms/lightning or other types of weather giving wet, slippery surfaces?
- Is there an on-going safety check system of harnesses, ropes, ladders and access/lifting equipment and where they exist on roofs, anchor points before the commencement of work?
- Is there a system which prevents employees from working on roofs if they are unwell or under the influence of drugs or alcohol?
- Are there any special conditions to consider i.e. excessive roof pitch, limited ground area, fragile roof, electrical power lines?

OTHER IMPORTANT REQUIREMENTS

- Never force parts to fit because all parts are designed to fit together easily without undue force.
- Never drill holes in the tank of the cooler.
- Check the proposed cooler location, to ensure that it is structurally capable of supporting the weight of the cooler, or provide an adequate alternate load bearing structure.
- Ensure the installation complies with all local and national regulations with regards to electrical, plumbing and bushfire construction requirements.
- In areas where temperatures can cause water supply pipes to freeze, a drain down facility should be provided during the installation. This drain down facility must be activated prior to freezing conditions, to avoid possible damage to the cooler components.
- Details on how to register your product warranty can be found near the end of this manual.

MAINTENANCE NOTE

As with any product that has moving parts or is subject to wear and tear, it is VERY IMPORTANT that you maintain the product and have it regularly serviced. It is a condition of warranty cover for your product that you comply with all of the maintenance and service requirements set out in this manual. Compliance with these requirements will prolong the life of your product. Further, it is also a condition of warranty cover that each item in the Maintenance Schedule in this manual is performed with the frequency indicated, by a qualified, licensed technician, and that the Maintenance Schedule is properly filled out (ie names, signature, date, and action taken) when the item is completed.

ANY FAILURE TO CARRY OUT THE REQUIRED MAINTENANCE AND SERVICING REQUIREMENTS, AND ANY FAILURE TO PROPERLY FILL OUT THE MAINTENANCE SCHEDULE, WILL VOID YOUR WARRANTY.

COOLER VIEWS

DOWN DISCHARGE

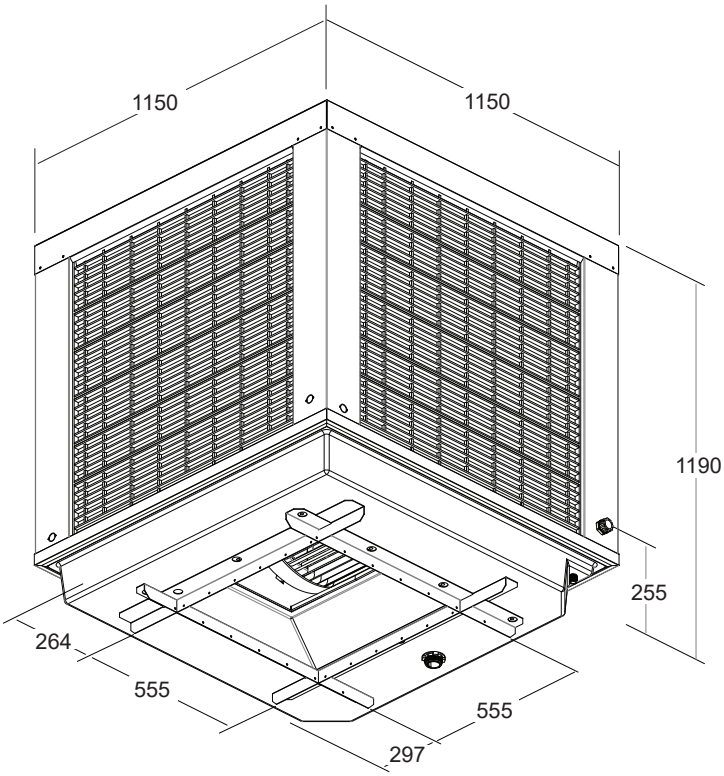

BOTTOM

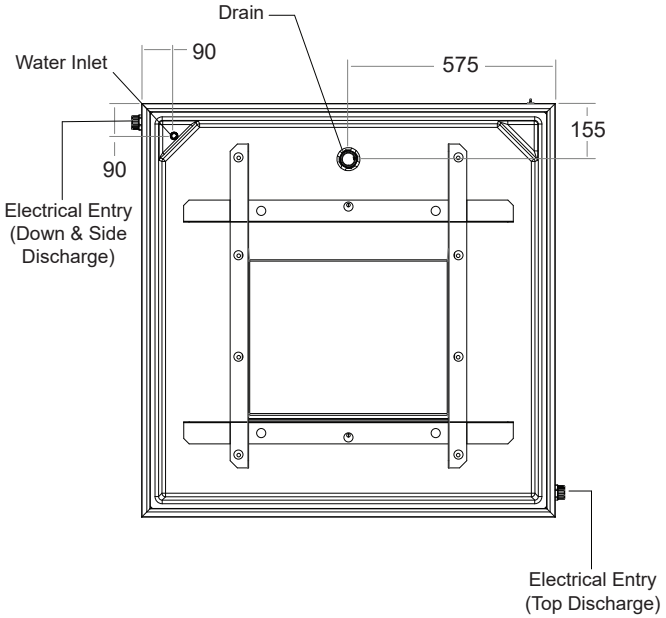

TOP DISCHARGE

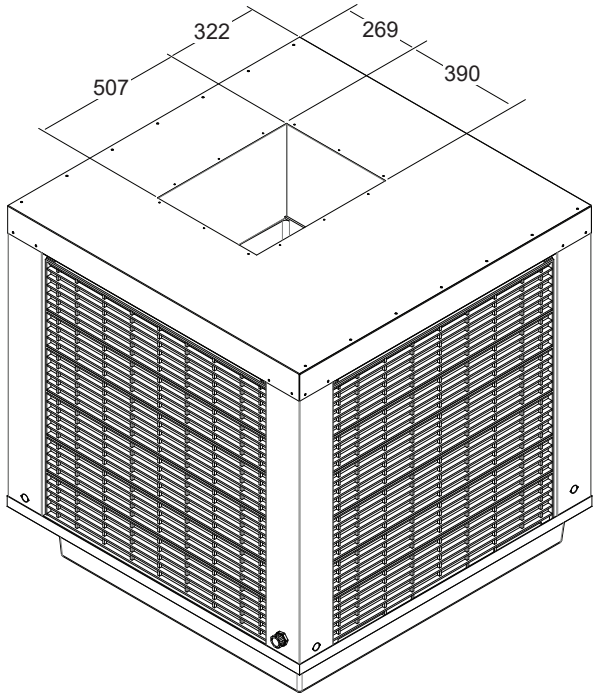

SIDE DISCHARGE

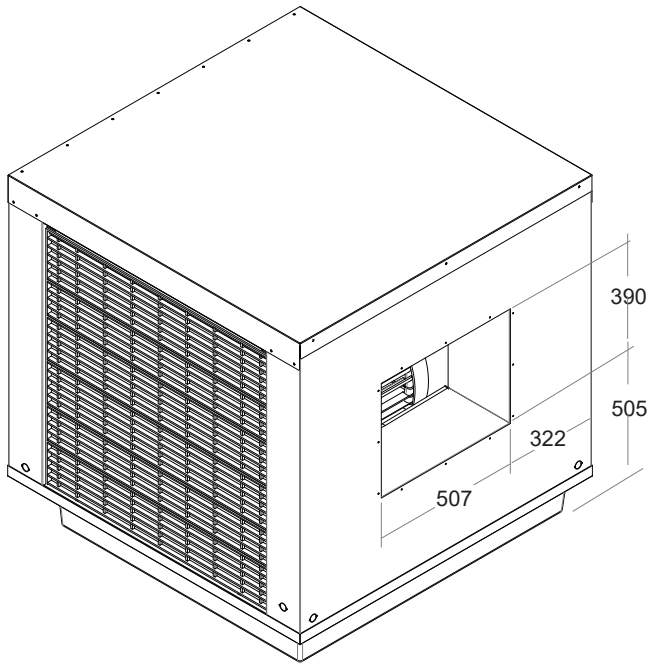

ILL3989

Dimensions are in mm

COOLER VIEWS

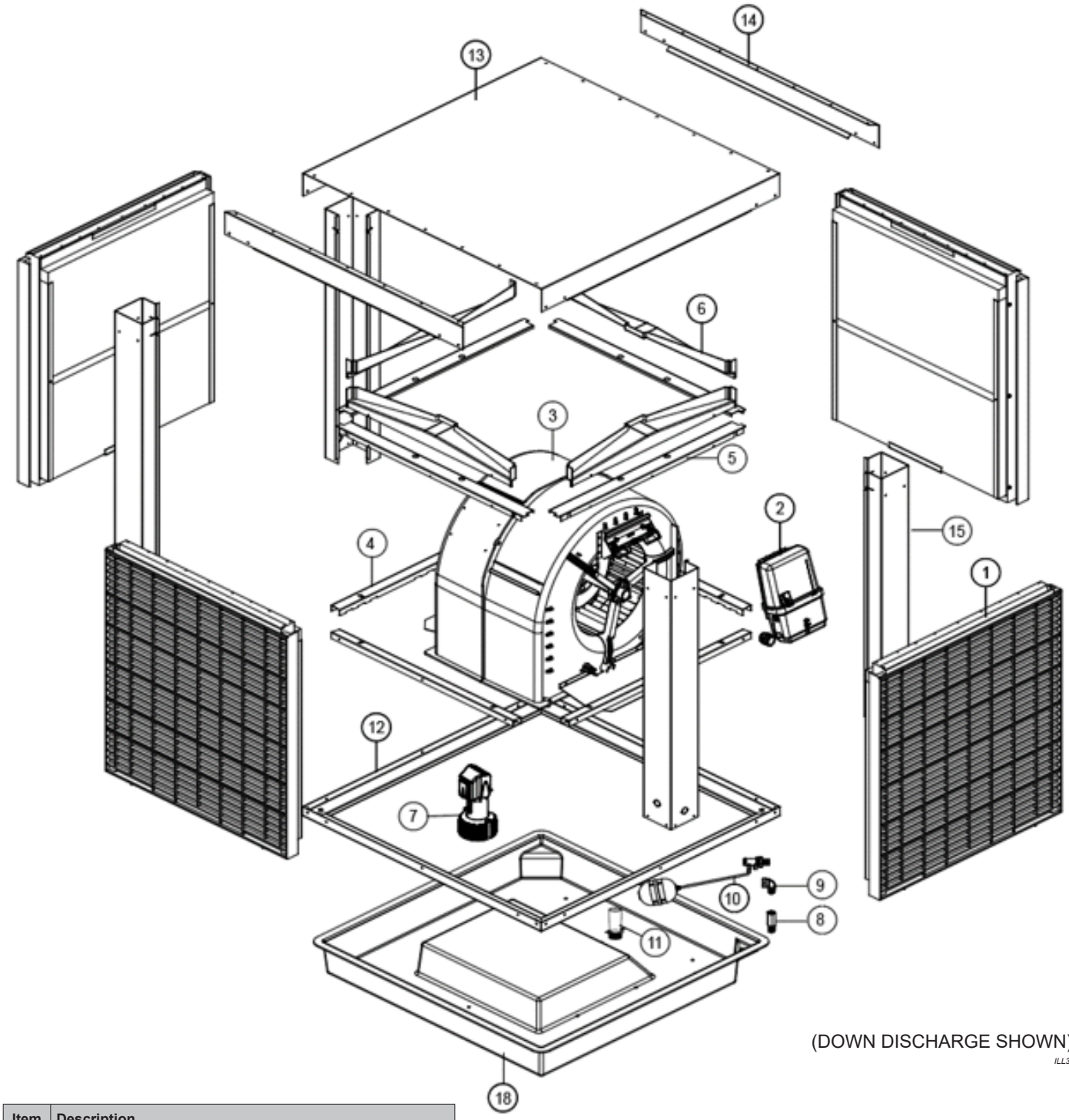

(DOWN DISCHARGE SHOWN)

ILL3990

Item	Description
1	PAD FRAME ASSEMBLY
2	CONTROL BOX
3	FAN/MOTOR/SCROLL ASSEMBLY
4	BOTTOM RAIL
5	TOP RAIL
6	WATER SPREADERS
7	PUMP
8	WATER INLET ADAPTOR
9	WATER INLET ELBOW
10	FLOAT VALVE
11	WATER OVERFLOW ASSEMBLY
12	BASE FRAME EXTRUSION
13	CABINET TOP
14	CABINET TOP PLATES
15	CORNER PILLAR
18	WATER RESERVOIR

COOLER CONTENTS

INSTALLATION COMPONENTS

Item	Seeley Part	Description	QTY
1A 1B	859753 639860	Installation, Operation, Maintenance Manual Setting Water Flow Rates Instructions	1
2	583020	Grommet for Dropper	1
3	804415	O'Ring BS128 38IDx2.6 N70	1
4	608884	Overflow Tube	1
5	200105	Rubber Washer 58x48	1
6	935409	Nut & Bush	1
7	823553	Control Cable, 20m, with Ferrite	1
Side & Top Discharge Models only			
8	9611006	Flexible Connector	1
9	9611007	Flexible Connector Straps	4

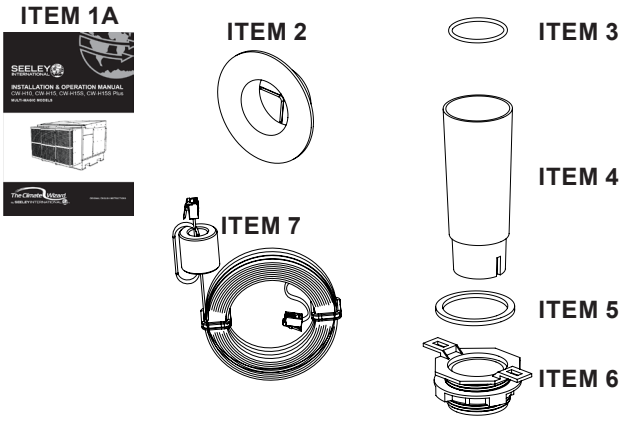

OPTIONAL COMPONENTS

Item	Seeley Part	Description
1	073392	Water Manager Kit

COOLER CONTROLS

This cooler is compatible with a wide range of MagIQtouch control solutions, including Wall Controllers, Building Management System (BMS) Controllers and Sensor Accessories. Contact your local Sales office for compatible kits and installation literature.

TRANSPORT

MOVING THE COOLER

The cooler can be moved either by fork-truck or pallet-truck whilst it is resting on its dedicated pallet.

Do not slide the cooler, lift and carry it.

LIFTING THE COOLER

Lifting the cooler is made easier by removing the pad frames first. They can be replaced at the very end of the installation procedure.

It is recommended that at least 2 people carry the cooler whenever it needs to be moved.

The cooler may be lifted by a crane with slings through the cooler pallet. It is recommended to use a spreader bar. Protect the upper edges of the cooler with a corner protector beneath the lifting straps to avoid any damage to the cabinet during the lift.

Do not attempt to lift using any cabinet features or by retrofitting lifting lugs. The cabinet may be damaged and/or lift safety compromised.

UNPACKING THE COOLER

The cooler will be delivered on a dedicated pallet and will be wrapped in plastic film which will need to be removed before installation.

A small box containing components that are required for installation can be found inside the cooler.

EQUIPMENT RECEIPT

Inspect the cooler for any damage caused in transit. Any such damage must be immediately reported to the shipper of the goods.

The unit has been factory tested to check for correct operation of all components. If any part is missing or damaged, notify the supplier immediately.

INSTALLATION

COOLER LOCATION

Check the proposed cooler location to ensure that it is structurally capable of supporting the weight of the cooler, or provide an adequate alternate load bearing structure.

Model	Shipping Weight	Operating Weight
RPSI Down/Top Discharge	120 kg	140 kg
RPSI Side Discharge	110 kg	130 kg

Carefully consider neighbouring properties and noise levels when locating the cooler, if necessary talk to the customer and the neighbour before carrying out the installation.

Always locate the cooler where it will receive a plentiful supply of fresh air and not in a recess where it may be starved for air or where the air is polluted. Provision must be made for access to electricity, water supplies and drains.

Ensure the cooler location is a minimum of:

- 3.0m (10’) from a solid fuel heater flue
- 1.5m (5’) from a gas flue
- 1.0m (3.5’) away from adjacent solar panels or similar roof mounted fixtures
- 6.0m (20’) from a sewer vent
- 600mm (2’) from a wall.

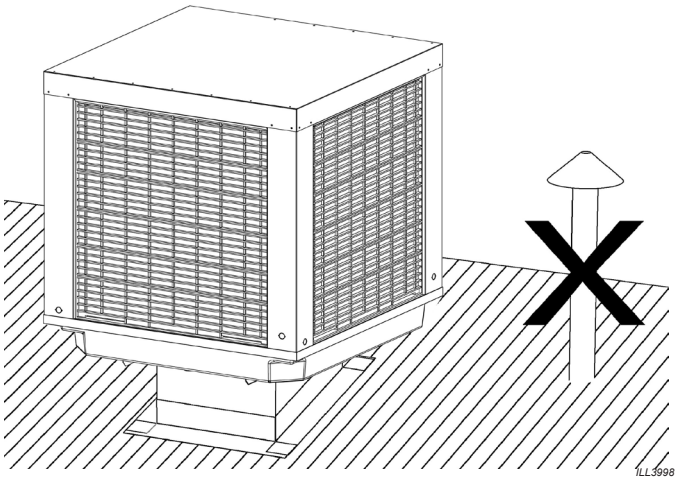

- 3.0m (10’) (preferably 5.0m (17’)) away from any TV antenna or antenna cables. Make sure the cooler is not between the antenna and the transmission tower that is providing the television signal to the home.

BUILDING EXHAUST RELIEF OPENINGS

Evaporative coolers operate on 100% fresh outside air and, to provide efficient cooling or ventilation, there must be sufficient exhaust relief openings to the outside of the building.

Relief openings can be via open doors, windows or vents. Allow approximately 0.4m² per 1000l/s of supply air. If fly wire screens are fitted to the relief area, allow up to 0.8m² per 1000l/s.

Select relief openings to provide the best pattern of cool air flow through the building. For example, open windows and doors that are farthest from the outlet vent in each room. Note that relief openings may be ineffective if exposed to high winds.

Where the design of the building prevents adequate exhaust relief openings, consideration should be given to the provision of mechanical extractions, such as an exhaust fan.

ACCESS FOR SERVICING AND MAINTENANCE

The cooler should be installed in a position that allows adequate access for installation, and future maintenance and servicing activities. This should comply with installation guidelines and any local, State and National regulations.

Consider the following for installation location:-

- Which has clear access to and around the cooler
- Which is clear of fixtures in line with below clearances
- Which is clear of fall edges (> 3m (10') away)
- Which is structurally capable of supporting the weight of the cooler and service technicians

Required clearances around and between coolers for future maintenance and servicing are shown below.

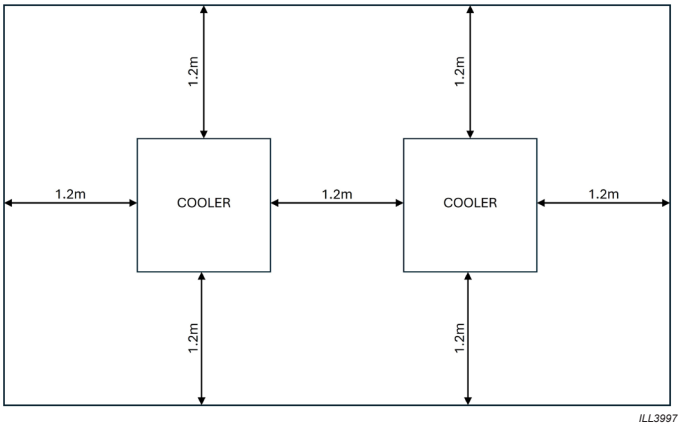

Extra service or warranty charges may apply for the cost of any equipment or additional labour involved in accessing the cooler if these guidelines are not met.

Note! Do you need to discuss the installation of items like safety anchor points with the customer?

INSTALLATION

MOUNTING / SUPPORT

The cooler shall be fixed to its support structure using self drilling screws (not provided) through the steel mount on the bottom of unit.

DOWN DISCHARGE MODELS

The cooler is designed to be mounted on a metal supply air duct with outside dimensions of 550 x 550mm and 1.0mm thick.

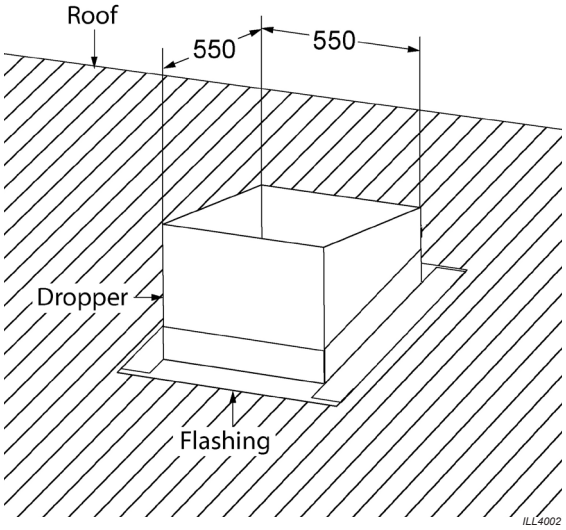

SIDE / TOP DISCHARGE MODELS

The cooler is designed to be mounted onto a level platform which must be strong enough to support the operating weight of the cooler.

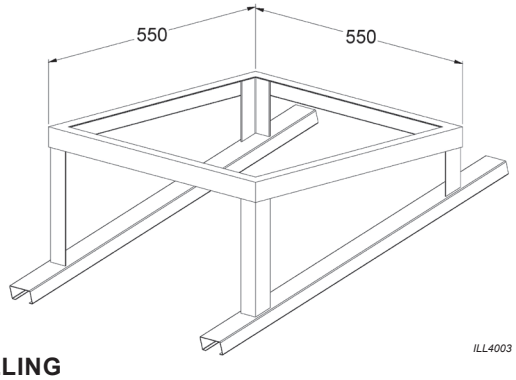

LEVELLING

It is important that the cooler is level in all directions. Coolers which are not level may cause reduced water pump flow rates and/or increased drain water overflow.

Ensure the top of the support structure is level and square in all directions (use a spirit level).

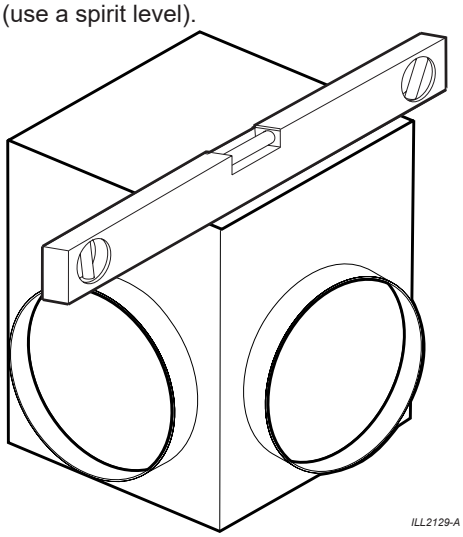

SUPPLY AIR DUCT CONNECTIONS

It is the installers responsibility to adequately secure ductwork to the cooler. All ducts must be independently supported.

All duct direction changes must utilise a generous radial turn with internal air directors to minimise turbulence and maximise efficiency.

All ducts are to be suitably insulated to minimise temperature losses.

For installations which require the cooler power and communications cables to pass through the inside of the supply duct, cut a 50mm (2”) diameter cable exit hole in the side of the duct.

Fit the rubber cable grommet suppled in the installation kit to protect the cables from the raw cut edge.

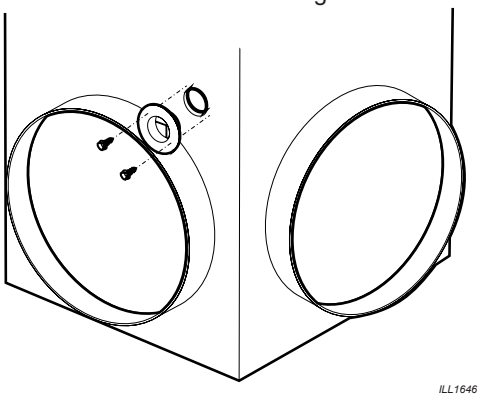

SIDE / TOP DISCHARGE MODELS

Dimensions for the supply air duct interface for side and top discharge models are shown in the cooler views at the beginning of this manual.

Inside these units will be a flexible connector intended to be fitted on site to allow better alignment to duct work.

Rivet or screw the flexible connector to the cooler using the supplied metal straps. Pull the connector tightly around both connections. Failure to tension correctly may cause the connector to flap and result in premature failure.

FITTING AND REMOVING PAD FRAMES

To remove a pad frame, gently insert a flat head screw driver into one of the two recesses on the bottom of the frame.

Leaver the frame upwards until the cooling pad is clear of the retention strip. Repeat on the other side of the frame.

Take hold of the pad frame, pivot it outwards from the top and pull down and outwards. Be careful not to damage the cooling pad.

To refit the frame to the unit, push the top of the frame in first lining up the cooling pads with the retention strip of the corner pillars. Once pads are lined up push in the bottom of the frame until the frame clicks into the lower retention strip.

ELECTRICAL REQUIREMENTS

ELECTRICAL SUPPLY INSTALLATION

INSTALLATION OF THE COOLER MUST CONFORM TO LOCAL ELECTRICAL RULES, REGULATIONS AND STANDARDS.

It is a requirement of Seeley International that all coolers be wired with a dedicated circuit and circuit breaker/fuse at the distribution board.

A mains isolation switch, with all pole disconnection, shall be furnished by the contractor and installed adjacent to the cooler.

See the cooler rating label for the correct electrical data. Before connecting, make sure the power supply matches the cooler voltage and frequency.

Electrical Supply Specification:

RPSI2500: 220-240V / 50 Hz / 5.8A

RPSI2800: 220-240V / 50 Hz / 9.0A

ELECTRICAL POWER CABLE

A power cable is provided with the cooler.

WARNING! If the power cable is damaged it must be replaced by the manufacturer, its service agent, or similarly qualified persons in order to avoid a hazard.

Pass the power cable through the conduit gland located on corner of unit.

Terminate the power cable in a junction box installed near the cooler (e.g. on the outside of the supply duct).

Important! Ensure the mains cable is not submerged or touching the water in the reservoir at any point along its length.

FIELD WIRING DIAGRAM

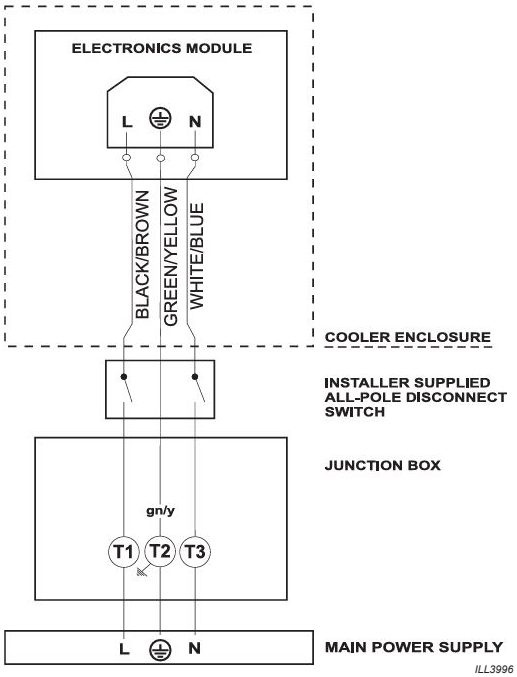

Once the controller is connected, power up the cooler using the ON/OFF switch on the cooler electronics box.

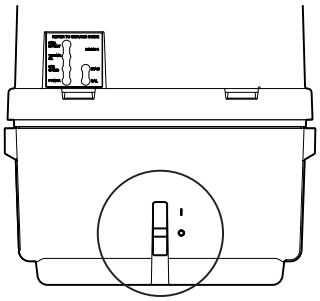

COOLER ELECTRONICS

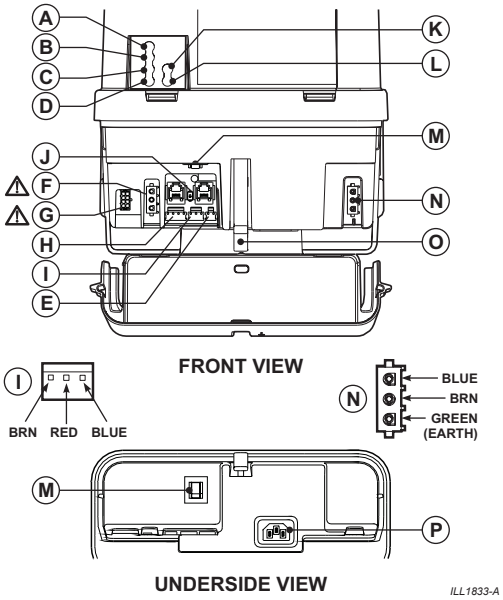

Legend

A - Hall Effect LED
B - Thermal Overload LED
C - Fan Speed LED
D - Power LED
E - Inlet Solenoid
F - Motor Power
G - Motor Overtemp Sensor Lead
H - Water Probes
I - Drain Valve
J - Wall Control
K - Tri-colour Diagnostic LED
L - Water Manager Status LED
M - Circuit Breaker
N - Pump
O - Mains Power Isolation Switch
P - Mains Power Connector

COMMUNICATION CABLE

A 20m (66') control cable is provided with the cooler.

Connect one end of the control cable (with ferrite suppressor) to the either of the Wall Control ports on cooler electronics box.

DOWN DISCHARGE MODELS

A hole is provided in the side of the blower housing for installations which require the communication cable to pass through the inside of the supply duct.

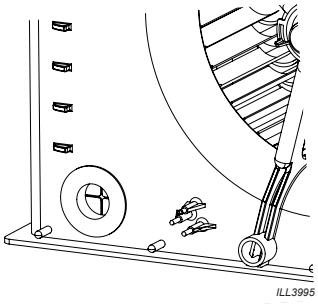

SIDE / TOP DISCHARGE MODELS

Cable knockouts are located on the corner pillars. Use a knockout on the opposite side to the power cable and use the supplied grommet to protect the cable against sharp edges.

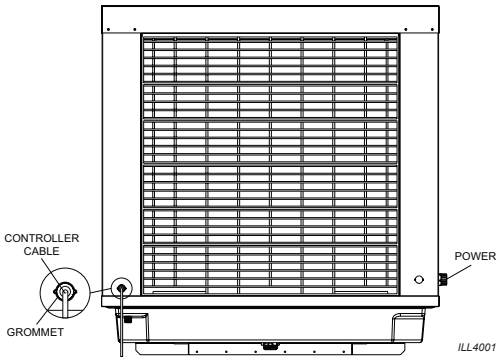

WATER REQUIREMENTS

WATER SUPPLY INSTALLATION

The cooler requires a permanent water supply to be connected.

INSTALLATION OF THE WATER SUPPLY MUST CONFORM TO LOCAL PLUMBING RULES, REGULATIONS AND STANDARDS.

The following specifications for water supply are required:

Water Connections:
½" BSP. Use flexible hose for the final connection to assist with future maintenance.

Water Supply:
100kPa (15psi) - 800 kPa (115psi)
10L/min (2.6 gal/min) MINIMUM
20L/min (5.3 gal/min) RECOMMENDED

Water Supply Temperature:
40°C (105°F) MAXIMUM

WATER SUPPLY PRESSURE REGULATION

The Installer must provide a pressure regulator in the water supply line adjacent to the cooler to regulate water supply pressures between 100kPa (15 PSI) and 800kPa (115 PSI).

Important! Water pressures which are lower than 100kPa (15 PSI) will prevent the inlet solenoid valve from opening.

Important! Water pressures which are higher than 1200 kPa (175 PSI) and/or water temperatures which are higher than 40°C (105°F) risk inlet solenoid valve failure.

Water pipes installed on the outside of a building, or any other exposed location, shall have adequate insulation to protect against freezing in the winter and solar radiation heating in the summer.

If a non-return valve is installed in the water supply line, it is recommended that a suitable pressure relief valve is also installed between the cooler and non-return valve to limit the pressure rise associated with the heating effects of ambient temperature and solar radiation.

WATER SUPPLY ISOLATION

The Installer must provide a manual 1/4 turn ball type shut off valve (do not use a stop cock) in the water supply line adjacent to the cooler, subject to local plumbing regulations. This allows the water supply to be isolated whenever work needs to be done on the cooler.

In areas where temperatures can cause water supply pipes to freeze, a drain down facility should be provided during the installation. This drain down facility must be activated prior to freezing conditions, to avoid possible damage to the cooler components.

WATER SUPPLY FILTRATION

It is recommended that the Installer provide an inlet water filter, with a minimum 500 microns mesh, in the water supply line, external to the cooler, to prevent any debris from entering and damaging cooler components.

Important! Flush the water pipe to remove any contaminants (swarf, filings or dirt) before final fitting. Contaminants can lodge in the inlet valve, preventing it from functioning correctly.

WATER HAMMER

Not all installation pipeworks are the same, and some may require additional prevention against water hammer.

If water hammer is a problem, it is the responsibility of the Installer to fit an appropriate water hammer arresting device external to the cooler.

WATER FLOAT VALVE

An internal float valve controls the water level inside the reservoir. The float valve must be set to maintain the water level approximately 30mm below the overflow level.

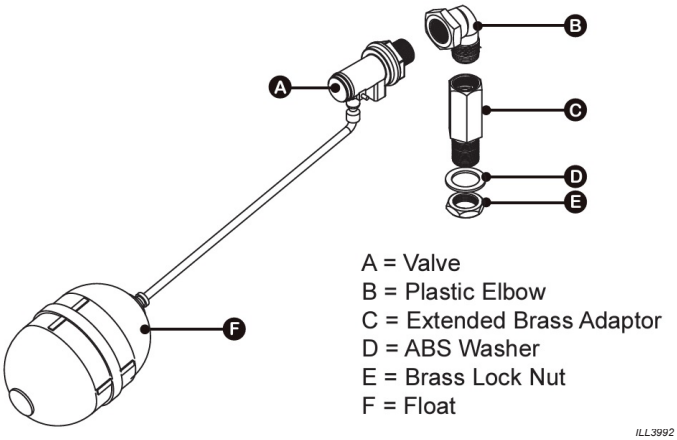

WATER DRAIN INSTALLATION

The cooler requires a permanent water drain to be connected.

INSTALLATION OF THE WATER DRAIN MUST CONFORM TO LOCAL PLUMBING STANDARDS.

Drain Connections:
1.5" (40mm) BSP Male

The cooler installation kits contains components for an overflow pipe which must be fitted on-site.

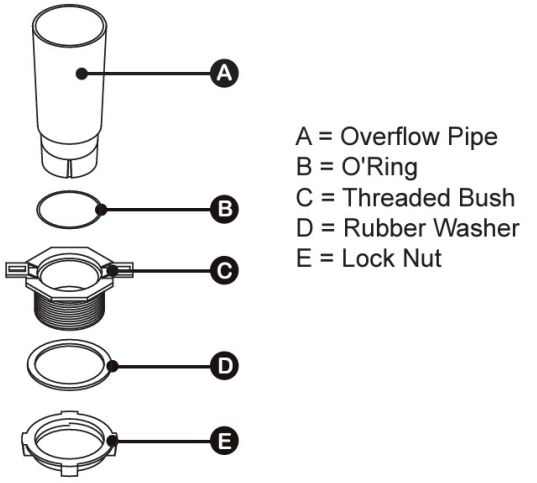

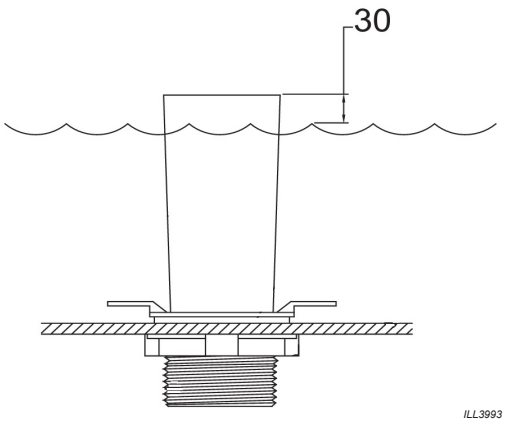

Important! Water drained from the drain valve is high in salinity and must be carried away to a suitable discharge point on the building or property. Never drain the water directly onto the roof

WATER REQUIREMENTS

WATER BLEED CONTROL

Important! When using the overflow pipe, it is essential to continuously bleed a small amount of water to reduce the accumulation of salts and minerals in the cooler.

Adjustment to the bleed rate is made by turning the bleed control tap to the desired setting. The bleed control tap is located externally on a corner pillar. Place the hose from the bleed tap into the overflow pipe. Ensure the tube cannot be pinched when replacing cooling pads.

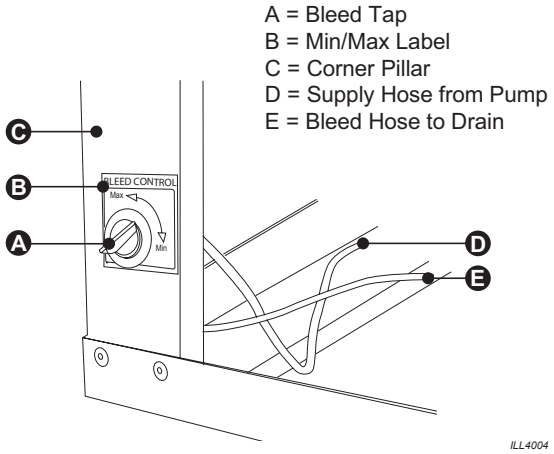

Follow the instructions in the Commissioning section to set the recommended bleed rates.

ELECTRONICS SHORTING PLUG

A shorting plug should be fitted to the cooler electronics box of coolers using water bleed control.

The shorting plug must be inserted before power is applied to the cooler electronics. Upon power on, the electronics will automatically operate as “NO DRAIN CONTROL”.

Note! This will override parameters/settings from the wall controller.

If the shorting plug is removed whilst power is on, the change will not be noticed by the cooler electronics until the next power on.

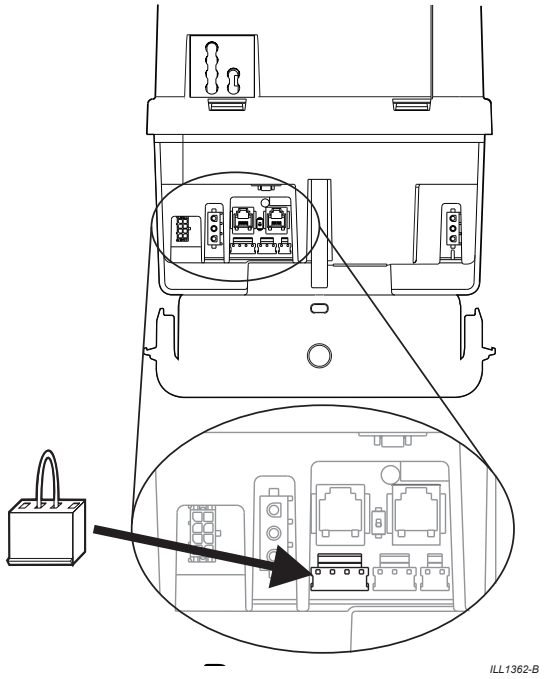

OPTIONAL WATER MANAGER KIT

An optional Water Manager Kit is available which contains an inlet water solenoid valve, water salinity probes, and an electric drain valve. When fitted, the overflow pipe, continuous bleed and shorting plug are not required.

Follow the instructions provided in the kit to fit the new components.

Important! Drainage systems with long pipe runs, multiple entry points, and/or incorporating traps shall use a tundish or similar device to create a 25mm (1") air-gap between the bottom of the drain valve and the drainage system.

The Water Manager Kit maintains the water quality in the cooler by periodically draining the reservoir and refilling with fresh water. It can be configured in two different ways.

Water Management System

The reservoir's water salinity is continuously monitored. Upon reaching a preset level the drain valve will open. How often this process occurs depends upon the quality of the water supply and the rate of evaporation.

The salinity set point can be adjusted between NORMAL (4275uS/cm) or LOW (2305us/cm).

Timed Drain

Alternatively, the cooler can be set to drain saline water at a preset period of pump operating time. This will disable the salinity measuring circuit and simply drain water from the reservoir every 65 minutes of operation.

Changing between the different methods and set points is done via the wall control. See the instructions on the cooler settings screens on the MagIQtouch wall control or changing the cooler parameters on the MagIQcool wall control.

COOLER CONTROL OPTIONS

MAGIQTOUCH CONTROLS

This cooler is compatible with a wide range of MagIQtouch control solutions, including Wall Controllers, Building Management System (BMS) Controllers, and Sensor Accessories.

There are three main ways that an evaporative cooler can operate to provide cooling comfort.

- The cooler can be set at a constant fan speed.
- The cooler can be given a temperature target, in which case it will vary the fan speed in order to get as close to the target as possible. (**Note!** Humid weather conditions may limit what temperatures can be achieved.)
- The cooler can be set to a fan only mode, providing air circulation only.

COMMUNICATION CABLE

Coolers are supplied with a 20m (66’) control cable. Longer cable lengths are available for order via Seeley International.

Failure of the product or components to operate correctly due to modification to supplied cables, or the use of non-approved cables will NOT be accepted under the Manufacturer’s Warranty.

Important! Routing communication cables and AC power cables in close proximity can result in intermittent communication errors, locking up of screens, and/or inconsistent erratic operation.

Seeley International recommends:

- Not routing data/communication and AC power cables in the same conduit.
- Not cable tying or taping data/communication and AC power cables together.
- Crossover communication and AC power cables at right angles.
- A minimum separation distance, as specified by local wiring standards, between communication and AC power cables. In Australia this minimum separation distance is 50mm.

Important! The maximum cable length allowed from the MagIQtouch Controller to the first cooler is 40 metres (131’), between each subsequent cooler 40 metres (131’) up to a maximum total distance of 500 metres (1650’).

MAGIQTOUCH SWITCH PLATE

ILL4005

The MagIQtouch switch plate offers independent control for the fan speed and cooling functions. Each cooler requires a dedicated switch plate. No group control is possible.

To run the cooler in VENT mode:

- Switch the AIR control on.
- Turn the SPEED knob, to select the required fan speed.

To run the cooler in COOL mode:

- Switch the AIR control on.
- Switch the COOL control on.
- Turn the SPEED knob, to select the required fan speed.

To stop the cooler.

- Switch the COOL control off.
- Switch the AIR control off.

COOLER CONTROL OPTIONS

MAGIQTOUCH WALL CONTROL

ILL1582-C

The MagIQtouch Wall Control is colour touchscreen providing manual fan speed control, thermostatic setpoint, and 7-day programs. A single wall control can operate up to 60 coolers with group control.

Within the SETTINGS menu of the MagIQtouch Controller is the COOLER sub-heading. Here various settings of the cooler can be adjusted.

Refer to the MagIQtouch Installation & Operation Manual for full setup instructions.

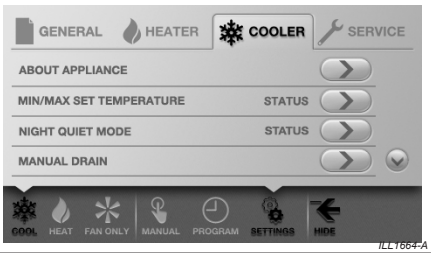

ILL1664-A

ABOUT APPLIANCE
Displays information such as model number, serial number and software version for all coolers connected to the controller.
MIN/MAX SET TEMPERATURE
Defines the min and max temperature set points for use in COOL mode.
QUIET MODE
Restricts fan speed to a specified level during a specified period.
MANUAL DRAIN (only if Water Manager Kit fitted)
Turns cooler off and drains the reservoir.
PAD FLUSH
Turns cooler off and runs pump for a specified amount of time.
DRAIN AND DRY (only if Water Manager Kit fitted)
Cooler will drain and fan will run for 1 hour every day at a specified time.
WATER MANAGER (only if Water Manager Kit fitted)
Select the preferred water management method: Salinity Measurement - replaces water when salinity level reaches set point. Timed Drain - drains the reservoir after 8 fill cycles or every 65 minutes No Drain Control - salinity control external to electronics, e.g. continuous bleed. No Water Thermostatic - allows Thermostatic control in VENT mode.
WEATHERSEAL OPEN SPEED
The cooler fan will turn at the specified speed for the first 10 seconds each time it starts up. It will then return to the set fan speed.
PRE-WET
When COOL mode is activated, the pump will run for 90 seconds before the fan is switched on.
SALINITY LEVEL (only if Water Manager Kit fitted)
Sets the salinity level at which the reservoir will drain in “SALINITY MEASUREMENT” mode. Can be set between NORMAL or LOW.
TANK DRAIN DELAY (only if Water Manager Kit fitted)
Set a drain valve opening delay after the pump is turned off.
EXTERNAL AIR SENSOR (only if Sensor fitted)
Set external air temperature set points at which the pump turns off and the drain valve opens.
AUTOMATIC CLEAN (only if Water Manager fitted)
Run a Cooling Core Flush and Tank Drain based on cooler operating time.

M1 INDUSTRIAL CONTROL

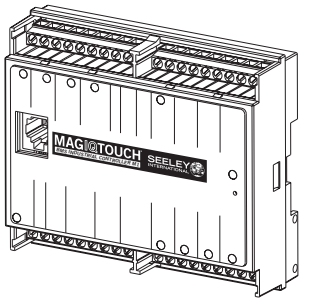

ILL2110-A

The MagIQtouch M1 industrial controller is a 24Vdc (SELV) circuit that offers various inputs and outputs to achieve different functions of the cooler as well as status feedback.

1 x BMS M1 module is required per cooler on the system.

Refer to the MagIQtouch M1 Installation & Operation Manual for full setup instructions.

MS1 INDUSTRIAL CONTROL

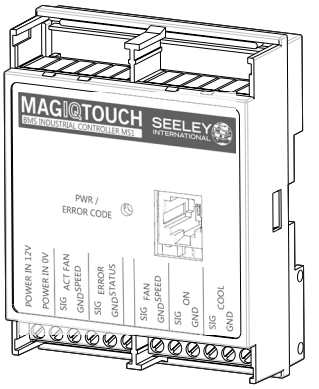

ILL2244-A

The MagIQtouch MS1 industrial controller can operate multiple coolers in the same installation. This controller can be used with and without the MagIQtouch Wall controller depending on system requirements.

PRIMARY Mode

In Primary Mode, 1 x MS1 controller is required to operate 1 x cooler. No MagIQtouch wall controller is required.

SECONDARY Mode

In Secondary Mode, the MS1 controller will allow control of multiple coolers to change between a single MagIQtouch wall controller or a BMS.

Refer to the MagIQtouch MS1 Installation & Operation Manual for full setup instructions.

GROUP INSTALLATIONS

Each cooler electronics box has a terminating resistor dipswitch located near the communications port. Ensure all cooler electronics dipswitches are set to “OFF” except for the last cooler in the series. The last cooler dipswitch should be switched to “ON” to ensure communication reliability.

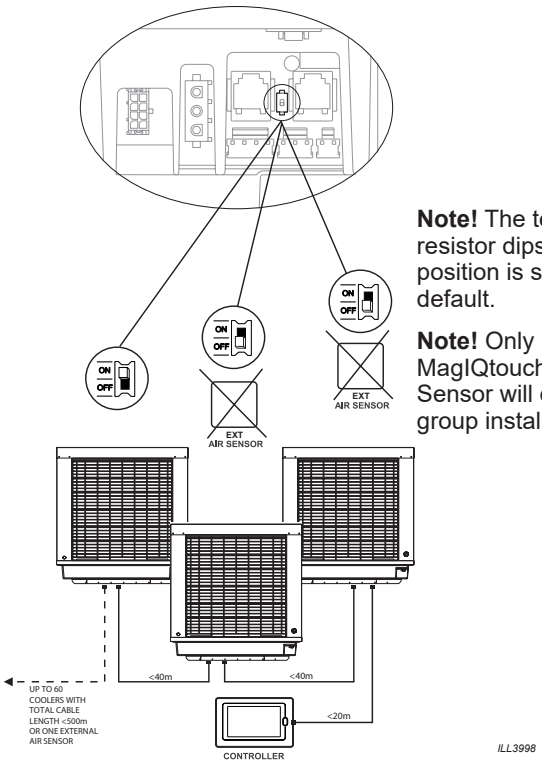

ILL3998

Note! The terminating resistor dipswitch position is set to OFF by default.

Note! Only 1 x MagIQtouch External Air Sensor will operate in a group installation.

COOLER CONTROL OPTIONS

MAGIQCOOL WALL CONTROL

INITIAL INSTALLATION

Upon initial installation of a cooler, or after the wall control has been changed, the word “SERVICE” will appear on the screen, indicating that communication needs to be established between the wall controller and the cooler electronics.

To establish communications simply push and hold the “DOWN” button until the word “SERVICE” disappears from the screen and the temperature appears. This may take up to 10 seconds.

Each cooler requires a dedicated wall control. No group control is possible.

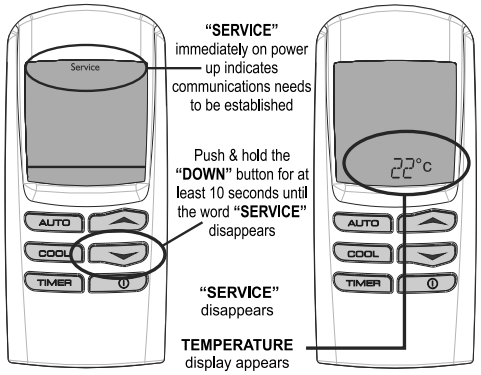

ILL2122-B

TURNING THE COOLER ON

The wall control can be switched on and off by pressing the button. The wall control will remember the previous setting it was in when the cooler was last used.

PREPARING TO START

Whenever you select AUTO mode or COOL in MANUAL mode, the cooler will take a few minutes to start as it fills with water and saturates the cooling . The time will be decreased if the tank is full or the cooler has only recently been turned OFF.

During this time “Preparing to Start” will flash on the display.

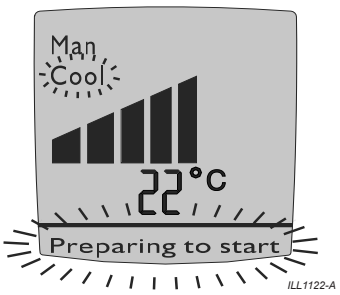

ILL1122-A

MANUAL MODE

Manual mode offers independent control of the fan speed and cooling function.

With the wall control switched ON, press the AUTO button until MAN is shown on the display.

Press the COOL button to switch between COOL and VENT

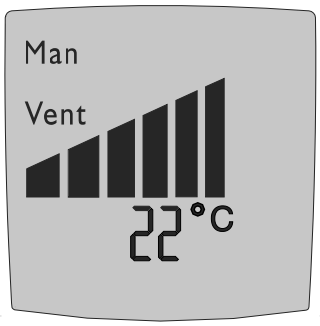

ILL1123-B

Once COOL or VENT has been selected, the wall control will maintain a constant fan speed. This is indicated by the bar graph shown on the display.

Press the ▲ or ▼ buttons to increase or decrease the fan speed as required.

AUTO MODE

Auto mode requires users to set a target room temperature and the wall control will automatically adjust the fan speed and turn the pump on and off.

With the wall control switched ON, press the AUTO button until AUTO is shown on the display.

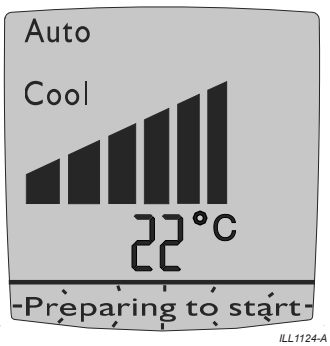

ILL1124-A

Press the ▲ or ▼ buttons to increase or decrease the room temperature setpoint.

MANUAL DRAIN (IF WATER MANAGER KIT FITTED)

With the wall control in “OFF” mode, press and hold the ▲ and ▼ buttons together for 1 second. “dr” is displayed and the drain valve will open.

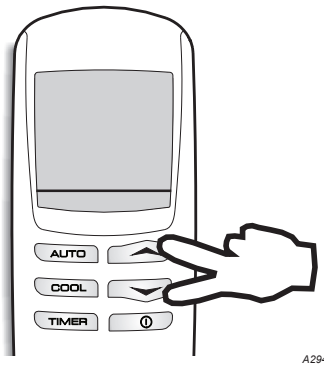

A294-B

COOLER CONTROL OPTIONS

DELAYED START

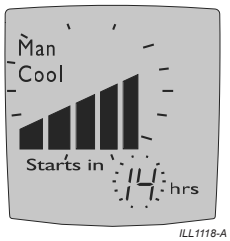

ILL1118-A

The wall control can be programmed to start in a specified number of hours. It can only be set when the cooler is OFF.

Programming In Manual Mode

(1) Press the TIMER button.

(2) Press the AUTO button until MAN is displayed.

(3) Press the ▼ or ▲ button to set a desired fan speed.

(4) Press the COOL button to set either COOL or VENT.

(5) Press the TIMER button and 'Starts in' time will start flashing.

(6) Use the ▼ and ▲ buttons to select the desired number of hours.

(7) Press TIMER again.

Programming In Auto Mode

(1) Press the TIMER button.

(2) Press the AUTO button until AUTO is displayed.

(3) Press the TIMER button and 'Starts in' time will start flashing.

(4) Use the ▼ or ▲ button to select the desired number of hours.

(5) Press TIMER again.

DELAYED STOP

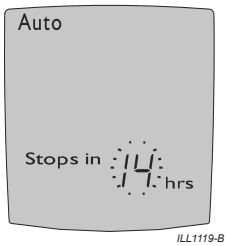

ILL1119-B

The wall control can be programmed to stop after a specified number of hours. It can only be set when the cooler is ON.

(1) Press the TIMER button and the 'Stop in' time will start flashing.

(2)Use the ▼ and ▲ buttons to select the desired number of hours.

(3) Press TIMER again.

FAULT CODES

When a fault has been recognised by the wall control the word "Service" flashes on the screen. To see the fault code press the ⏻ button.

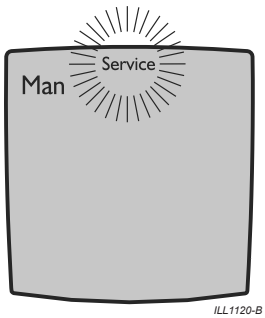

ILL1120-B

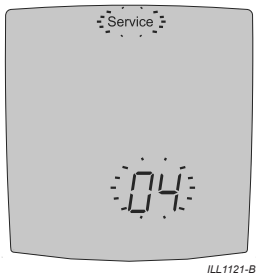

ILL1121-B

The wall controller will store the last 10 known fault codes. To access the fault code logs;

(1) While the wall control is "OFF" push and hold down AUTO for at least three (3) seconds and then press ▲ while still pressing AUTO .

(2) When parameter mode has been entered, screen will display "F1" and "Param". Pressing ▲ or ▼ buttons will scroll through Fault history location "F1" to "FA".

(3) To view a fault code, select the fault location (F1 – FA) and press AUTO. For example to see the third most recent recorded fault, highlight 'F3' and then press AUTO. The number displayed will indicate the fault code.

(4) To exit and view other fault locations, press AUTO.

ENTERING PARAMETER MODE

To enter Parameter mode, the following process must be carried out within 4 minutes of power being applied to the cooler. If unsure of time since the last power "ON", remove power to the cooler (Isolator Switch or Circuit Breaker) for a minimum of 6 seconds so the mode can be entered.

(1) While the wall control is "OFF", push and hold down AUTO for at least three (3) seconds and then press ▼ while still pressing AUTO.

(2) When parameter mode has been entered, the screen will display "A1" and "Param". Pressing ▲ or ▼ buttons will scroll through parameters "A1" to "A8"

(3) To view parameter number set in wall control press AUTO momentarily. Figure "A#" on screen will change to number set, and "Param" will change to "value".

(4) To alter "value" of selected parameter press ▲ or ▼.

(5) To store the value, press AUTO. Screen will go blank momentarily as wall control stores parameter change, and returns screen to "A#" and "Param".

(6)To exit parameter mode or escape from an alteration without storing a change press ⏻ button instead of AUTO button. Remember, once step 5 has been carried out, new parameter change is permanent until again altered.

(7) If no buttons are pushed on wall control, after 3 minutes screen will reset to "OFF" state. Procedure to enter parameter mode must be re-initiated.

Parameters

NO.	DESCRIPTION	VALUE
A1	**Water Salinity Control Method Selector**	
	Water Manager (measure & control salinity)	0*
	Timed Drain (65 minutes)	1
	Non Drain Valve salinity control (bleed etc)	2
	No Water, thermostatic vent, Auto temp control	3
A2	**Weather Seal Opening Speed**	
	Whenever the fan is turned ON, Fan will run 10 seconds at the higher of: Fan Speed as requested by the Wall Control Weather Seal Opening Speed set at A2 (Default = Speed 5)	05
A3	**Pre-wet Enable**	
	No pre-wet	0
	Pre-wet	1*
A4	**Wall Control Backlight Disable**	
	Backlight 'OFF'	0
	Backlight 'ON'	1*
A5	**Conductivity Set Point**	
	Normal - 4275 µS/cm	0
	Low - 2305 µS/cm	1*
A6	**Reservoir Drain Delay**	
	Drain 3 hours after COOL off	1
	Drain 12 hours after COOL off	2
	Drain 3 days after COOL off	3*
A7	**Auto Re-start after Power Failure**	
	Requires manual re-start when power OFF	0
	Auto restart	1*
A8	**Temperature Units**	
	Display °C	0*
	Display °F	1

* = Default Value

COMMISSIONING

Owner Name: .....

Address: .....

.....

Telephone: .....

Dealer: .....

Date Installed: .....

Model No: .....

Serial No: .....

Installer: .....

INSTALLATION CHECKLIST

This checklist only covers the key points to be observed during installation. Always refer to the relevant sections of the installation manual for full details.

COOLER LOCATION

□ The integrity of the roof structure has been assessed as being able to support the cooler weight.
□ The cooler is adequately supported, secure, and level.
□ The cooler is installed in a position that allows adequate access for future maintenance and servicing activities.
□ The cooler will always receive a plentiful supply of fresh air.

SUPPLY AIR DROPPER/DUCTWORK

□ All building penetrations are correctly flashed and sealed.
□ If flexible ducts are used, they are fully extended, hung correctly, with no kinks, tight bends, or squashed segments.
□ All duct joints are fully sealed with no air leaks.
□ The air balance for all outlets has been adjusted to the customer's satisfaction.

ELECTRICAL SUPPLY

□ The electrical power supply installation adheres to all local and national regulations
□ The electrical power supply is wired back to the distribution board on its own separate circuit.
□ A mains isolation switch, with all pole disconnection, has been installed adjacent to the cooler.
□ The owner has been instructed how they can electrically isolate the unit in case of an emergency.
□ The Line-Neutral voltage is within the Rating Label specification.

Record the details

Voltage L-N .....

WATER SUPPLY

□ The water supply installation adheres to all local and national regulations with no leaks at any fittings or valves.
□ The water supply pipes were flushed of any foreign materials before connection to the cooler was made.
□ The water is filtered as required.
□ Static water pressure to each cooler is between 100kPa (15psi) and 800 kPa (115psi).
□ Water flow rate to each cooler is greater than 10L/min (2.6 gal/min) when all coolers are filling.
□ An isolation valve has been installed adjacent to the cooler.
□ The owner has been instructed on how to isolate the water supply to the cooler in case of emergency.

Record the details

Water Pressure .....

WATER DRAIN

□ The water drain installation adheres to all local and national regulations with no leaks at any fittings or valves.
□ Drain water pipes/hoses are free from any restrictions (kinks) or blockages.
□ The drain water does not discharge onto the roof surface.

WATER MANAGER KIT (only if fitted)

□ The inlet water solenoid valve is installed the correct way around.
□ Opening and closing the inlet water solenoid valve does not cause water hammer.
□ The drain valve is installed instead of the overflow pipe.
□ Using a wall control, the Water Management System has been set to either
□ Salinity Setpoint or
□ Timed Drain

Signed by Installer: .....

Commissioning Technician: .....

COMMISSIONING

FAN CHECK

Important! Risk of injury to body parts coming into contact with a rotating fan. Ensure fan is clear of all objects before starting.

□ Set speed initially to 1 and then progressively increase to 10.
□ Confirm no unusual or excessive sounds at all fan speeds.
□ Confirm no excessive vibration and/or rattle sounds.

WATER LEVEL CHECK

Important! Risk of water being pulled into the fan and/or creating a wet roof surface. Never run the pump unless all side panels are installed.

Turn water supply and inlet solenoid valve (if fitted) ON

□ Confirm water enters reservoir.
□ Adjust float arm and confirm float valve shuts off when water level is approximately 30mm below overflow level.

Turn Pump ON

□ Confirm pump starts.
□ Confirm there are no external water leaks.
□ Confirm all hose circuits are connected correctly.

COOLING PAD FLUSH & DRAIN

To reduce the probability of unusual odours, foaming, or water pull off, it is recommended to flush new cooling pads with fresh water and then drain the reservoir.

□ Run the pump without the fan for 15 minutes. Alternatively, if using a MagIQtouch Wall Control, enable the Pad Flush mode.

After the flush process, open/remove the drain.

□ Confirm the drain valve (if fitted) opens.
□ Confirm water fully drains from the reservoir.

SET WATER BLEED RATE

Adjustment to the bleed rate is made by turning the bleed control tap, located externally on a corner pillar, to the desired setting.

The required bleed rate will vary with the water supply quality, but should be initially set to the recommended bleed rates as set out in below.

MODEL	LITRES PER 10 MINUTES	LITRES PER 60 MINUTES
RPSI2500	1.2	7
RPSI2800	1.6	10

If the water supply is of poor quality, higher bleed rates are necessary to ensure reasonable pad life and cooler performance.

Check the bleed rate by running into a graduated container for a set time.

Record the details

Bleed Rate .....L/m

Note! The water bleed in not required if the Water Manager Kit is installed.

COOLING PAD SATURATION CHECKS

If the water flow rate to the cooling pads is too high, water draw-off or carryover will occur, often resulting in unit damage and premature component failures. In some cases, water droplets can be sucked into the fan and blown into the duct system.

If the water flow rate to the cooling pads is too low, they will not become saturated leading to poor cooling performance.

The aim is to have all the pads suitably damp but not flooded.

The cooler is fitted with an adjustor tap located in the water distribution system between the pump and cooling pads.

Pre-set the tap to ½ open and run the cooler for at least 10 minutes in COOL mode at full speed with all cooling pads fitted.

- If the cooling pads are found to have dry sections, stop the unit, and open the flow tap a small amount and re-test.
- If the cooling pads are found to be very wet, and in danger of flooding, stop the unit, and then close the flow tap a small amount and re-test.

After adjustments have been made confirm:

□ All cooling pads have even water saturation.

Note! Cooling pad evaporation rates change with entering air (ambient) conditions. The water flow rate should be set with this in mind and may have to be readjusted due to seasonal weather changes.

Note! New cooling pads may require a period of conditioning for to saturate correctly (Approximately 3 weeks continuous operation depending on water quality).

Avoid Flooded Cooling Pads!

Over time, water carryover will result in premature component failures, excessive corrosion, and damage to electrical components in the cooler.

Damage due to water carryover is not covered by warranty.

CUSTOMER HANDOVER CHECKLIST

Run the cooler for at least 20 minutes in COOL mode at full speed and confirm:

□ Leaving temperatures are sufficiently cooler than ambient temperatures.
□ No unusual odours.
□ No visible water leaks.
□ No excess water is draining from overflow.

Explain to the customer:

□ The principles of ducted evaporative cooling.
□ How far the windows need to be opened.
□ How to turn the cooler on.
□ How to operate the wall controller.
□ How to drain the cooler.

Finally, confirm that:

□ The customer has been given a copy of the cooler manual which includes Operation, Maintenance & Warranty details.
□ All installation rubbish has been removed.
□ Any property damage reported and/or repaired.

Signed by Installer: .....

Commissioning Technician: .....

COMMISSIONING

CONTROL BOX LEDS

The cooler has a series of flashing LEDs visible on the electronics box.

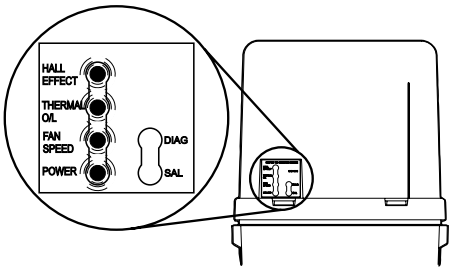

ILL1651-A

HALL EFFECT LED

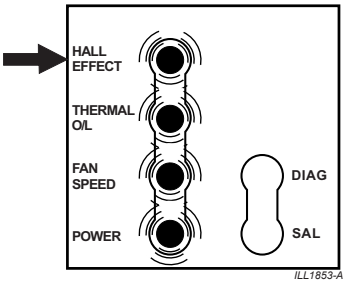

ILL1853-A

LED	INDICATES
ON	Normal operation when motor ON.
OFF	One or more Hall Effects sensors in motor not detected. Indicates a faulty motor.

THERMAL OVERLOAD LED

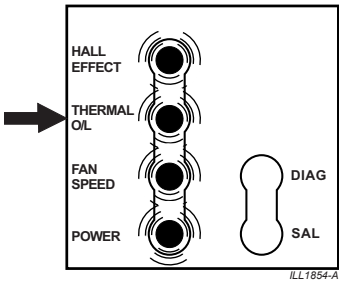

ILL1854-A

LED	INDICATES
ON	Normal operation when motor ON.
OFF	Thermal Overload in motor tripped. **CAUTION!** Motor in overload mode may re-start without warning. Note! If motor does not spin for more than 30 secs, the LED will turn “OFF”.

FAN SPEED LED

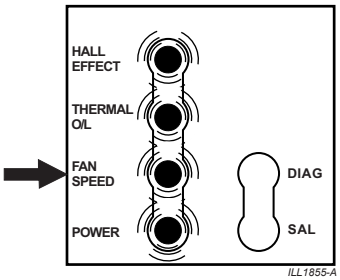

ILL1855-A

LED	INDICATES
ON	Normal operation when motor ON
OFF	Fan is rotating 30% slower than set speed, or fan does not start within 30 seconds of being turned on..
FLASH	Fan is rotating 20% faster than set speed.

POWER LED

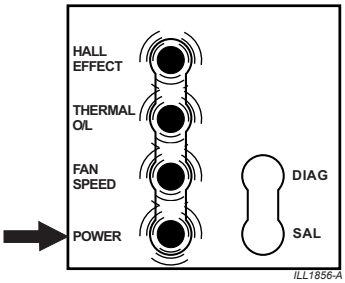

ILL1856-A

LED	INDICATES
ON	Normal operation when motor ON.
OFF	No power to motor.

Note: If the POWER LED is ON but no other motor LED’s, check the Motor Sensor cable is plugged in correctly. If it is, the motor is faulty.

DIAGNOSTIC LED

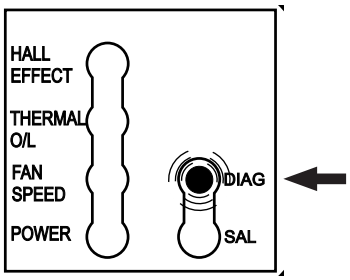

LED	INDICATES
OFF	No power or electronics failure
GREEN FLASH	Normal operation.
RED FLASH	Fault Code. See Fault Code descriptions

SALINITY LED

Note!. Applies to coolers fitted the Water Manager Kit only.

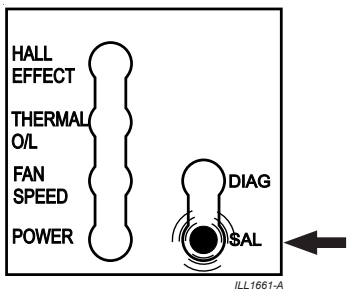

ILL1661-A

LED	INDICATES
1 Flash	Water salinity is below the set point.
2 Flash	Water salinity is above the set point.
3 Flash	Salinity control method is set for Timed Drain
4 Flash	Salinity control method is set for Continuous Bleed.
5 Flash	Thermostatic Control (no Water) operation set.
ON	Water Manager Kit is active, but water not detected.

FAULT CODE DESCRIPTIONS

The DIAGNOSTIC LED can flash either Green or Red and indicates the fault status of the cooler.

DIAG LED	FAULT CODE	FAULT DESCRIPTION	SUGGESTED REMEDY
2 Green Flash then 2 seconds off	-	**NORMAL OPERATION**	-
1 Red Flash then 2 seconds off	Fault Code #1	**COMMUNICATION FAILURE** Wall Control: No valid message for 60 seconds	Check communication cable connections. Replace Wall Control. Replace Communication Cable.
2 Red Flash then 2 seconds off	Fault Code #2 (Water Manager Kit only)	**FAILURE TO DETECT WATER** No water detected at probes 20 minutes after inlet water solenoid valve opening.	Check water supply on. Check solenoid valve open. Check float valve is working. Check water probe position relative to float valve shutoff. Check water probe position relative to drain valve overflow. Check drain valve fully closed. Clean water probe.
4 Red Flash then 2 seconds off	Fault Code #4 (Water Manager Kit only)	**FAILURE TO DRAIN** Water still detected at probes 20 minutes after drain opened.	Check drain valve open. Check drain pipework not blocked. Check solenoid valve closed. Clean water probe.

TROUBLESHOOTING

PROBLEM	POSSIBLE CAUSE	SUGGESTED REMEDY
Cooler fails to start/ not running.	Cooler in fault.	Clear active faults. Check MagIQtouch wall controller fault code log. Check tri-colour LED for fault code.
	No power to cooler.	Check circuit breaker. Consult with building manager.
	Wall control in 7-day program mode.	Adjust setpoint and/or timer settings. Switch to manual mode to check fan operation.
	Cooler not receiving commands.	Complete wall controller installation process.
	Fan stopped as motor speed is too fast.	Check for excessively long, undersized or squashed duct work. Check for sufficient open registers (grilles, diffusers). Check for weatherseal is opening fully. Check fan is not installed backwards due to recent motor change.. Check supply voltage is within rating label specification.
	Fan stopped as motor speed too slow.	Large extraction fans causing negative pressure. Check supply voltage is within rating label specification. Check motor bearings rotate freely.
Inadequate cooling.	Cooler running in vent mode.	Turn to cool mode.
	Incorrect wall control temperature setpoint.	Adjust wall control setpoint. Move wall control to more appropriate location.
	Water inlet solenoid is installed incorrectly	Check installed in the correct water flow direction.
	Clogged or dirty cooling .	Clean or replace cooling .
	Water pump failure.	Check pump is operating.
	Pumps run but insufficient water in reservoir.	Check cooler is level. Adjust float level Check water supply pressure.
	Pumps run but no water circulation to cooling	Clean pump strainer. Check water distribution system for possible obstruction in hoses. Check for blockages in the spreaders feeding the cooling .
	Inadequate exhaust from building.	Make sure there is adequate provision for exhausting air from building (open windows and doors).
	Under-sized ducts.	Carry out cooling load design to determine correct size unit, ducting and outlets required. Discuss with building manager.
	Under-sized cooler.	
	High ambient humidity.	On days during summer when ambient humidity is high the cooler will not reduce the temperature as much as on drier days. There is no remedy.
Excessive humidity.	Inadequate exhaust from building.	Make sure there is adequate provision for exhausting air from building (open windows and doors).
Noisy cooler.	Fans out of balance due to dirt, etc.	Clean the fans.
	Air duct noise	Increase size of ducts. Increase size of room registers/grilles
Unpleasant odour.	New cooling .	See Commissioning Section for Pad Flush
	Cooler located near source of unpleasant odour.	Remove source of odour or relocate cooler.
	Algae in reservoir water.	Drain reservoir, clean thoroughly with strong cleansing agent, refill, change cooling .
	Cooling remain wet after shutdown.	Run cooler on VENT mode to dry cooling out.
External water leaks.	Loose water hose connections.	Check and tighten connections.
	Blocked or undersized drains.	Check and clean drain lines.
	Float valve adjustment not correct.	Adjust float valve.
	Excessive amounts of water from drain hose.	Check drain valve seal. Check cooler is level. Adjust float level
Water carryover in supply airstream.	Clogged or dirty cooling .	Clean or replace cooling .
	New cooling .	See Commissioning section for Pad Flush
	Cooling not fitted correctly into pad frames.	Check for airgaps around water spreaders.

MAINTENANCE SCHEDULE

MAINTENANCE FREQUENCY

Maintenance of an evaporative cooler is essential in maintaining proper performance and reliability.

All maintenance must be done by competent, qualified, licensed technicians, in accordance with National and/or Local Regulations.

The frequency of service is largely dependent on the conditions under which the cooler is operated. External factors, such as air and water quality, can affect the serviceable life of the cooler and its components. In particular, installations using hard water, usually defined as greater than 200mg/L, will experience greater scaling problems requiring a more frequent cleaning regime.

Similarly, the amount and type of use can also have a significant impact. The guidelines listed below are intended to provide help in formulating a proper service regime. Local, and in some cases, individual factors should be taken into account when deciding on the frequency of visits.

HEALTH REGULATIONS. In some regions, regulations require that evaporative air coolers be serviced at specific intervals. Ensure all maintenance is done in accordance with any local and national regulations.

TYPE OF INSTALLATION	MAINTENANCE SCHEDULE SERVICING FREQUENCY
COMMERCIAL / INDUSTRIAL INSTALLATIONS (Seasonal use)	Maintenance Schedule servicing must be a minimum of twice a year, typically immediately before and after the summer season.
COMMERCIAL / INDUSTRIAL INSTALLATIONS (All year use)	Maintenance Schedule servicing must be performed every 3 months.

While installation is not covered by warranty (e.g. duct work, roof penetrations, electrical and water connections etc.), these items should be checked as they can affect the performance (and/or safety) of the cooler. For this reason, they are included in the Maintenance Schedule.

WINTER OPERATION AND SHUTDOWN

Evaporative coolers cannot be used in cooling mode in freezing conditions. In particular the inlet water solenoid valve, pumps, and drain valve are likely to fail in such conditions.

It is recommended that, to prevent damage to cooler components, the following tasks are completed before the start of the winter season.

1. Drain down and isolate the water supply.
2. Drain and clean the reservoir.
3. Remove the bleed funnel and o-ring or, if fitted, set the drain valve to the open position.
4. Isolate the power.

For installations requiring continuous operation through the winter, it is possible to run the cooler in VENT mode, however customers must ensure the controls are not accidently set to any cooling mode in these conditions.

MAINTENANCE SAFETY

Always liaise with the Building Manager prior to starting a service.

Before servicing or cleaning unit, switch power off at service panel and lock the service disconnecting means to prevent power from being switched on accidentally. When the service disconnecting means cannot be locked, securely fasten a prominent warning device, such as a tag, to the service panel.

To avoid any unintended cooler operation from commands received by a remote wall control, it is recommended that Service Technicians use a MaglQtouch compatible wall control and a short test lead at the cooler.

Important! Risk of injury to body parts coming into contact with a rotating fan. Ensure fan is clear of all objects before starting.

Important! Risk of water being pulled into the fan and/or creating a wet roof surface. Never run the pump unless all side panels are installed.

IMPORTANT NOTES:

- The cooler electronics box is a non-serviceable part. Do not open or attempt to repair any components.
- The cooler electronics box cover will only open and close with the ON / OFF switch in the “OFF” position. Do not try to force the cover open with the switch in the “ON” position.
- Always turn “OFF” mains power to the cooler before checking connections or touching wiring and components connected to the cooler electronics box.
- Take care to position the cables into the cover slots when closing, so that they do not become caught or pinched.

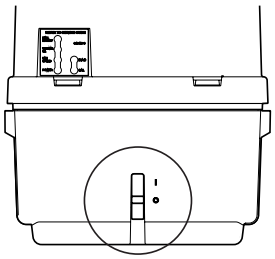

ILL1659-A

MAINTENANCE SCHEDULE

MAINTENANCE CHECKLIST

DEFINITIONS

Clean - To wash and remove all dirt, grit or debris.
Check/Inspect - To visually inspect the item for correct operation, fitment and functionality.
Test - To turn the item on and off and confirm correct function.
Replace - To remove the existing item and replace with a specified genuine replacement part.

Note! It is important that only new Seeley International factory authorised replacement parts be used in this cooler. Failure to do so may void warranty, cause improper cooler performance, and unsafe operation.

SERVICE NO.	1	2	3	4	5	6	7	8	9	10	11	12
EXTERNAL INSPECTION												
Check/Inspect the following parts for general deterioration, leaks, damage, corrosion, missing components, secure connections, and function.												
Cooler Body												
Supply Air Duct												
Support Frames / Curb												
Vibration Isolation												
Roof Flashing												
Isolation Switch												
Circuit Breakers/Fuses												
Power Cables												
Communication Cables												
Water Supply Pipe												
Water Supply Strainer/Filter												
Water Isolation Valve												
Drain Hose												
INTERNAL WATER DISTRIBUTION												
Check/Inspect the following for general condition, damage and secure connections.												
Water Distribution Hoses												
Float Valve												
Pad Pins & Washers												
Clean the following components												
Pump Strainers												
Water Spreaders												
Water Probe Pins*												
Reservoir Surfaces												
Cooling Pads												
Test the following												
Water Probe Resistance*												
Correct Internal Water Levels												
FAN & MOTORS												
Check/Inspect the following for general condition and damage.												
Fan Blades												
Motor Mounts												
Motor Spins Freely												
FUNCTIONAL TEST												
Test the following components from a MagIQtouch wall control.												
Inlet Solenoid Valve*												
Drain Valve*												
Pump												
Fan Speed Control												
Wall Control Operation												
Check/Inspect the following whilst running at full speed.												
No Excessive Noise												
No Excessive Vibration												
No Water Leaks												
Cooling Pad Saturation.												
Airflow through all duct outlets												

MAINTENANCE INSTRUCTIONS

INSPECTION PROCEDURES

1. Drain the cooler reservoir by initiating a manual drain
2. Isolate and lockout the power supply to the cooler.
3. Turn off the water supply.
4. Remove the side panels from all sides of the cooler.
5. Clean the Pump Strainer & Impeller.
6. Clean the Water Probe (if fitted)
7. Clean the Water Reservoir.
8. Inspect the entirety of the cooler body and external components for general deterioration, leaks, damage, corrosion, and loose or missing fasteners.
9. Re-fit the side panels from all sides of the cooler.
10. Turn on the power and water supply.
11. Complete the cooler commissioning sequence.

PUMP

Cleaning Pump Strainers & Impellers

1. Disconnect the plumbing hose from the spigot at the pump base.
2. Remove the pump assembly from the cooler cabinet.
3. To remove pump from the strainer, press the release button on the strainer, twist the pump body clock-wise with button depressed and lift the pump body out of the strainer base. Note the orientation prior to removal.
4. Inspect and clean the pump strainer and impellor housing. Remove any solids or residues from the strainer slots or around the impellor with a soft brush.

Note! When removing or unplugging pumps, take care to ensure they are replaced correctly.

- The pump body must be seated flush in outlet housing otherwise it will not pump sufficient water.
- Check the integrity of the hoses and their connection to the pump spigots.

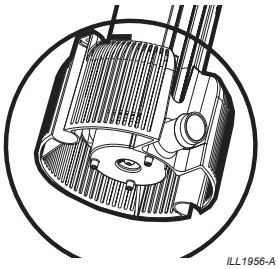

ILL1956-A

WATER PROBE

1. Unscrew the probe from the pump body.
2. Clean the pins by wiping the contact surfaces with a soft cloth - do NOT use abrasives.
3. Using a multi-meter, measure the pin resistances in the configuration below.

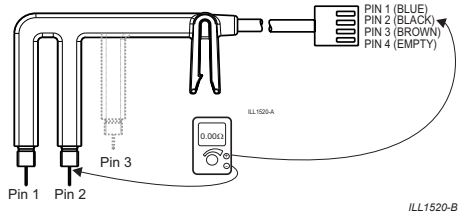

ILL1520-B

Resistance should be 0-5 ohms. A reading of 5 ohms or greater indicates a faulty probe. Check for shorts between pins: There should be an open circuit.

Note. The brown wire (Pin 3) is not connected on 2 pin probes.

WATER RESERVOIR (TANK)

Flushing of the water reservoir is best achieved with the overflow pipe / drain valve, pump, and water probe removed.

Use a water hose or low-pressure cleaner to flush all debris down the reservoir drain. After flushing wipe the bottom of the reservoir thoroughly using a wet cloth or brush.

COOLING PADS

As cooling pads age they can accumulate dirt and deposits which may reduce the water flow rate they can handle without producing water carryover.

Blocked pads may have to be replaced if the blockage cannot be cleaned out. Alternatively, the water or airflow may need to be temporarily reduced to compensate. This will result in reduced cooling capacity.

Visually inspect the flutes of the cooling pads for signs of deterioration or restriction.

Inspect pad-retaining components (pins, clips, wire mesh etc) for damage or corrosion and ensure they are correctly and securely fitted.

Cooling pads may be gently hosed to remove loose material, however they are fragile and care must be taken when handling or hosing to prevent damage.

Note! Do not wash the cooling pads with high pressure water spray. If the cooling pads are salted-up, replace them.

FAN MOTOR TESTING

Remove 3 pin motor plug. Using a multi-meter, measure the resistance of the 3 separate windings in the configuration below.

Note! All 3 separate windings must measure approximately equal values. Significantly differing values indicate a faulty motor.

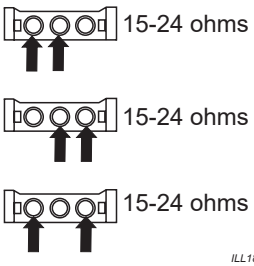

ILL1842-A

WARRANTY TERMS (AUSTRALIA)

HOW TO REGISTER YOUR PRODUCT WARRANTY (Australia only)

Please register your warranty online by visiting seeleyinternational.com
Step 1 - select **"Support"** then **"Register for Warranty"**
Step 2 Enter your product serial number and **"Submit"**
Step 3 Enter the required information and **"Submit"**

Important Note: You need to have the following information to complete your registration:

- your unit model and size
- serial number
- date your system was installed
- name of the dealer you purchased it from

Please complete this section. You will also need to retain your purchase receipt, and proof of any warranty period extension.

Brand: _____

Model: _____

Serial No: _____

Customer Name: _____

Installation Address: _____

Installation Type: Residential / Non Residential / Commercial

Date of installation: _____

Installer / Dealer: _____

As with any product that has moving parts or is subject to wear and tear, it is **VERY IMPORTANT** that you maintain your Cooler and have it regularly serviced. It is a condition of warranty cover for your Cooler that you comply with all of the maintenance and service requirements set out in the Owner's / Operation / Service Manual. Compliance with these requirements will prolong the life of your Cooler. Further, it is also a condition of warranty cover that each item in the Maintenance Schedule in the Owner's / Operation / Service Manual is performed with the frequency indicated, by a qualified, licensed technician, and that the Maintenance Schedule is properly filled out (i.e. names, signature, date, and action taken) when the item is completed.

ANY FAILURE TO CARRY OUT THE REQUIRED MAINTENANCE AND SERVICING REQUIREMENTS, AND ANY FAILURE TO PROPERLY FILL OUT THE MAINTENANCE SCHEDULE, WILL VOID YOUR WARRANTY.

WARRANTY TERMS (AUSTRALIA)

In this warranty:

We or ***us*** means Seeley International Pty Ltd (Seeley) ABN 23 054 687 035, and our contact details are set out at the end of this warranty;

You means you, the original end-user purchaser of the Goods;

Supplier means the authorised distributor or retailer of the Goods that sold you the Goods in Australia;

Goods means the product, unit, appliance or equipment which was accompanied by this warranty and purchased in Australia; and

Relevant Warranty Period means the various warranty periods as described in clause 1 and clause 3 below, as appropriate.

Our Goods come with guarantees that cannot be excluded under the Australian Consumer Law. You are entitled to a replacement or refund for a major failure and for compensation for any other reasonably foreseeable loss or damage. You are also entitled to have the Goods repaired or replaced if the Goods fail to be of acceptable quality and the failure does not amount to a major failure.

In addition to any rights and remedies that You may have under the Australian Consumer Law or any other law, subject to the terms of this warranty, We provide the following warranty:

1. If during the first five (5) years from the date of purchase when the Goods are used for personal, residential household purposes, and for two (2) years for any other purpose (including commercial use) the Goods upon examination prove defective by reason of improper workmanship or material, We will repair or replace, at our option, the Goods or any part thereof without charge for either parts or labour, during normal working hours.
2. The warranty granted under clause 1 applies to all components which form part of the original cooler, but does not cover:
   a) fair or normal wear and tear;
   b) damage, loss or claims caused by, resulting from, or arising out of any utilities that service or are connected to the Goods. This includes but it is not limited to electrical surges, and inadequacies, failure, or other problems in or with any electricity, power, or water supply to the Goods;
   c) after the first year: (i) the replacement, supply, or servicing of consumable items (including without limitation cooler , washers, seals, drive belts) and (ii) maintenance adjustments to the cooler; and
   d) despite clause 2.c. above, air filters;
   e) installation (including without limitation ductwork, fittings, and other related installation components) which is excluded.
   f) batteries (including damage caused by leaking or faulty batteries), cracking or breaking of display screens in controllers, physical damage caused by the user or third parties, and accidental breakage.
3. Seeley also warrants the structural integrity of all components made from our exclusive Permatuf polymers for ten (10) years and your cooler cabinet (base, top, corner supports, side panels, fan and fan housing) against damage caused to it by all forms of corrosion for twenty five (25) years.
4. During the period to which any expressed warranty applies, all defective part(s) shall be replaced or repaired (at the discretion of Seeley) without charge for either parts or labour, during normal working hours. Should we deem in our absolute discretion to replace the Goods pursuant to clause 1 or clause 3, we may substitute any similar good even if it is not on our current price/ equipment list. Further, Goods presented for repair may be replaced by refurbished goods of the same type rather than being repaired. Refurbished parts may be used to repair the Goods.
5. We are under no obligation to repair or replace the Goods or Parts under clause 1 and 3 above if (i) the Goods have not been installed and commissioned in accordance with the Installation Manual (ii) the Goods have not been installed and commissioned properly or competently, (iii) the Goods have not been operated, serviced and maintained in accordance with the instructions provided in the Owner's Manual, or (iv) if any such service or maintenance has not been properly or competently performed. It is a condition of warranty cover that each item in the Maintenance Schedule in the Owner's / Operation / Service Manual (if it was published with such a Schedule) is performed with the frequency indicated, by a qualified, licensed technician, and that the Maintenance Schedule is properly filled out (ie names, signature, date, and action taken) when the item is completed. Any failure to carry out the required maintenance and servicing requirements, and any failure to properly fill out a Maintenance Schedule in the Owner's Manual, will void your warranty. The addition of any third party device, (except where it is required by the installation instructions and complies with those instructions), or the removal or alteration of any Seeley component, or damage due to misuse of the unit, or faulty installation or commissioning, will void this warranty.
6. As far as the law permits, We will not be liable for any consequential loss suffered through, or resulting from, the non-operation, or ineffective operation of the cooler. The warranties granted under clause 1 and clause 3 do not cover damage to the cooler or other loss resulting from acts of God.
7. No other person, company or corporation is authorised to offer, or give on our behalf, any other warranty. The benefits conferred are in favour of You and any person deriving title to the cooler whilst in its original place of installation. Nothing in this warranty shall be construed as affecting any rights You may have under all the relevant laws, or Commonwealth or State Legislation which give You rights which cannot be modified or excluded by agreement.
8. In order to claim under the warranties granted under clause 1 or clause 3 You must:
   a) either:
      - contact us within the Relevant Warranty Period on Australia 1300 650 644; or
      - log a warranty claim on our website (website address below) within the Relevant Warranty Period; and
   b) make available for inspection by the service agent who will come to the location of the Goods or send to us at the address below within the Relevant Warranty Period: (i) the legible and unmodified original proof of purchase, which clearly indicates the name and address of the original retailer, the date and place of purchase, the product name or other product serial number, (ii) all of your records of all service and maintenance carried out to the Goods, plus the Maintenance Schedule in the Owner's Manual (if it was published with such a Schedule), (iii) a copy of the completed Warranty Information section above, and (iv) if an extended warranty period was provided by Seeley International for the Goods, then the relevant document provided by Seeley International confirming that extended warranty period. If you choose to send the documents described in (i) to (iv) to Seeley International, then they must be accompanied by a covering letter which states your name and address and daytime telephone number, the address at which the Goods are installed, and the model and serial number of the Goods.

WARRANTY TERMS (AUSTRALIA)

9. The warranty granted in clause 1 and clause 3 covers the costs of parts and labour but you will be responsible for:
   a) the cost of travel incurred for a Seeley International service agent to get to and from the location of the Goods if the location of the Goods is either: (i) outside the metropolitan areas of the capital cities; or (ii) more than 35 kilometres from an authorised Seeley International branch or service representative; and
   b) any costs for additional labour or equipment associated with gaining acceptable and safe service access to the Goods installed in restricted, high or unsafe locations, and/ or the removal and replacement of any barrier, walls, roofs, fences etc; and
   c) any costs incurred by the Seeley International service agent in gaining access to the Goods which is necessary to comply with any safety or workplace safety requirements and/or any other relevant regulations. For the avoidance of doubt, the reference to any costs incurred also includes the cost of any necessary site inductions.
10. We are not responsible in any way for any failure and/or inadequate performance of the Goods which arises from or is connected to the use in the Goods of non-genuine spare parts. Seeley International strongly recommends that only spare parts supplied or approved by it are used in the Goods.
11. The employees and Executive of Seeley International are not responsible for the installation of the Goods and expressly disclaim all liability resulting from incorrect installations or installations that do not conform to local electrical codes, local plumbing codes, Occupational Health and Safety requirements, and by laws which are legislated or in effect at the time of installation.
12. This warranty is only valid and enforceable in Australia.

Note: It is important that the safety and privacy of our service technicians is protected at all times. Accordingly, We and our Seeley International service agents reserve the right to refuse service if (i) safety and accessibility to the unit cannot be guaranteed or (ii) the owner of the unit, occupant of the site where the Goods are located, or any other third party seeks to take photographs, or make a video or audio recording, of the service technician(s) while they are on the site or carrying out service to the unit. If a service technician attends the site but subsequently leaves for any of these reasons then a service charge will be made for the call which charge shall be a debt immediately due and payable by the person or entity that has made the claim under this Warranty. If a service call reveals no warranty fault found with the Goods, a charge will be made for the call.

Our liability under this warranty is limited to the extent permitted by law. That is, to the extent that it is fair and reasonable, if the Goods are not of a kind ordinarily acquired for personal, domestic or household use or consumption, your remedies associated with any failure or defect of the Product will be limited to:

a) the replacement of the Goods or the supply of equivalent goods;
b) the repair of the Goods;
c) the payment of the cost of replacing the Goods or of acquiring equivalent goods; or
d) the payment of the cost of having the Goods repaired

and subject to the terms and conditions included in this warranty.

SERVICE DEPARTMENT

Seeley International Pty Ltd
112 O'Sullivan Beach Road
Lonsdale, South Australia 5160
Customer Service Centre 08 8328 3844
Website: www.seeleyinternational.com

FOR SERVICE

To book a Service on your Seeley International product:
Visit www.seeleyinternational.com the select **"Support"** and **"Find Agent / Book Service"** then enter the required information.
or Phone 1300 650 644 to be directed to your closest authorised Service Agent.

PRIVACY NOTICE

Seeley International Pty Ltd ABN 23 054 687 035 will use the personal information you provide us with to provide warranty support for the product you have purchased and to inform you about other products and services. If you choose not to supply us with the information requested, we may be unable to provide you with warranty support. We may also disclose your information to third parties, such as related entities; retailers, distributors, service agents and contractors who are affiliated with us; or marketing or market research companies. If you would prefer not to receive direct marketing communications from us, please follow the instructions to "unsubscribe" which will be included in the direct marketing communications we send you, or contact our Privacy Officer using the details set out below. While we do not currently transfer personal information to overseas recipients or store personal information overseas, if we transfer your information to third parties who do so, we will take reasonable steps to ensure that the overseas recipients do not breach the Australian Privacy Principles. By registering your warranty, you consent to having your personal information used in this way. Please read our Privacy Policy on our website www.seeleyinternational.com for further explanation of how we collect, use, hold and disclose personal information, and how you may access and seek correction of your information. It also sets out how you may complain about a breach of the Australian Privacy Principles, and how we will deal with your complaint. You may contact us at: Privacy Officer, Seeley International Pty Ltd, 112 O'Sullivan Beach Road, Lonsdale, South Australia 5160.

Affix serial & model
number sticker here

Warranty Service
Australia: 1300 650 644
New Zealand: 0800 589 151

Seeley International Technical Support
Australia: 1300 650 399
New Zealand: 0800 589 152

For all other regions, contact your local distributor:
seeleyinternational.com

Online Support Portal (AUS/NZ)
Scan or Click QR Code

It is the policy of Seeley International to introduce continuous product improvement.
Accordingly, specifications are subject to change without notice.
Please consult with your dealer to confirm the specifications of the model selected.